Accord Energy Solutions Limited

charm

Excel Demonstrator User Guide

a : Accord Energy Solutions Limited, 41 Queen's Lane South, Aberdeen, AB15 4BF
t : +44 (0)1224 472 547 f : +44 (0)1224 379392 e : charm@accord-esl.com w : accord-esl.com

charm

Contents

What is CHARM?

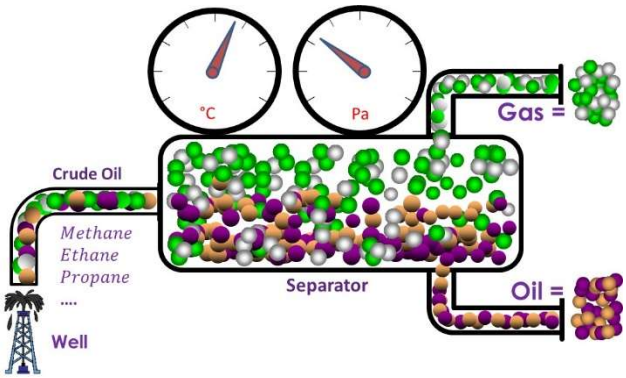

Developed by Accord Energy Solutions in partnership with Robert Gordon University, CHARM (Compact Hydrocarbon Allocation Reference Model) is a simple, fast and cost-effective process simulation software package which models hydrocarbon behavior specifically for allocation and accounting purposes.

CHARM performs flash calculations quickly and efficiently in order to determine how the hydrocarbons partition into liquids and gas as they pass through a process facility.

CHARM focuses on the calculations needed for hydrocarbon allocation which results in speedy, robust and repeatable results that are both transparent and auditable.

CHARM is designed to be easily integrated into existing and new allocation systems with a variety of supported deployment options covering both local installation and hosted web service. The Excel demonstrator makes use of the hosted web service.

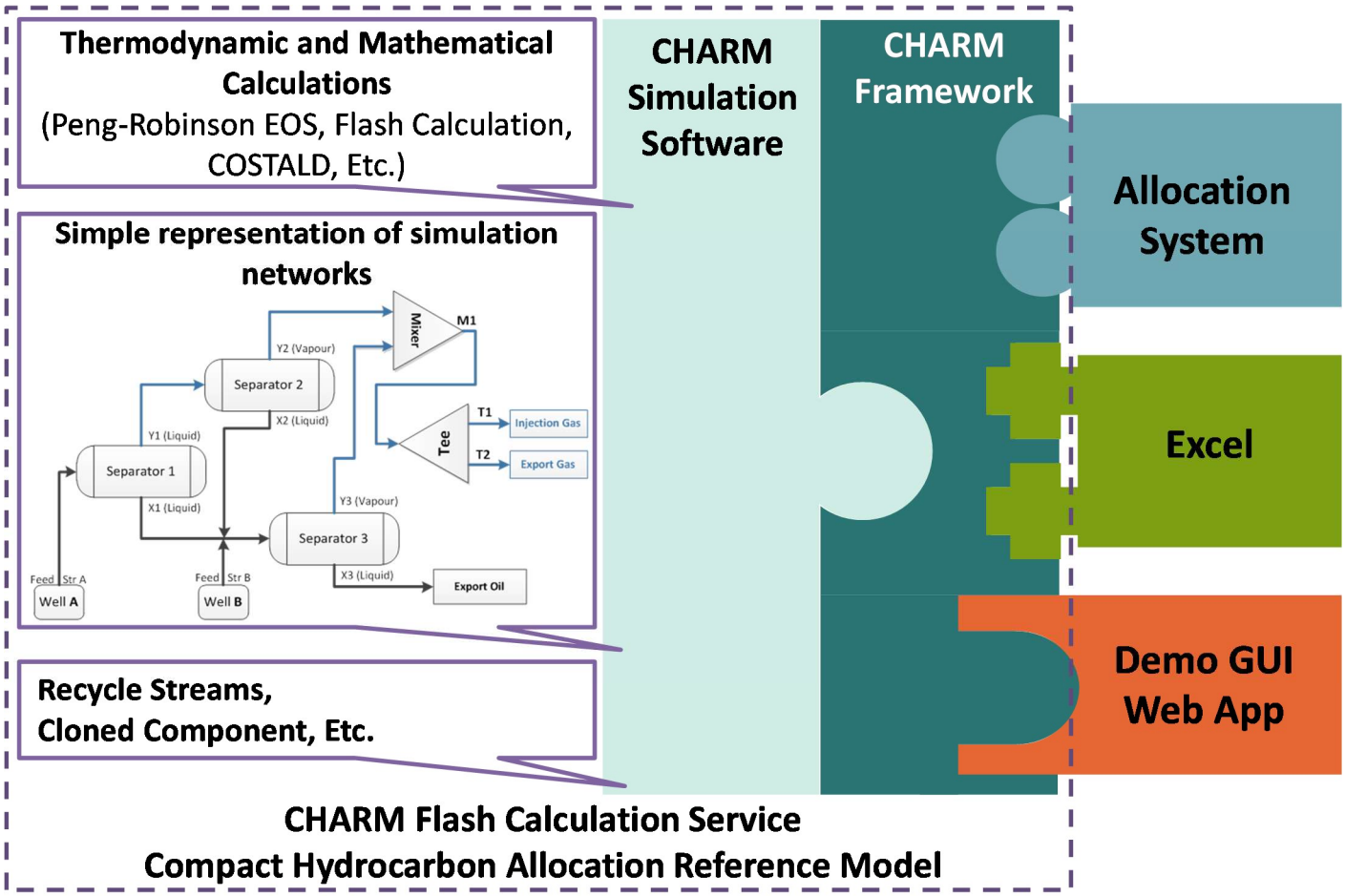

Running CHARM – Quick-start (1/2)

Before You Begin

The Excel demonstrator communicates with the CHARM Web Service over the internet using SOAP (Simple Object Access Protocol). Please check that your IT Department allows SOAP requests from your network. You will also need to enable Excel macros.

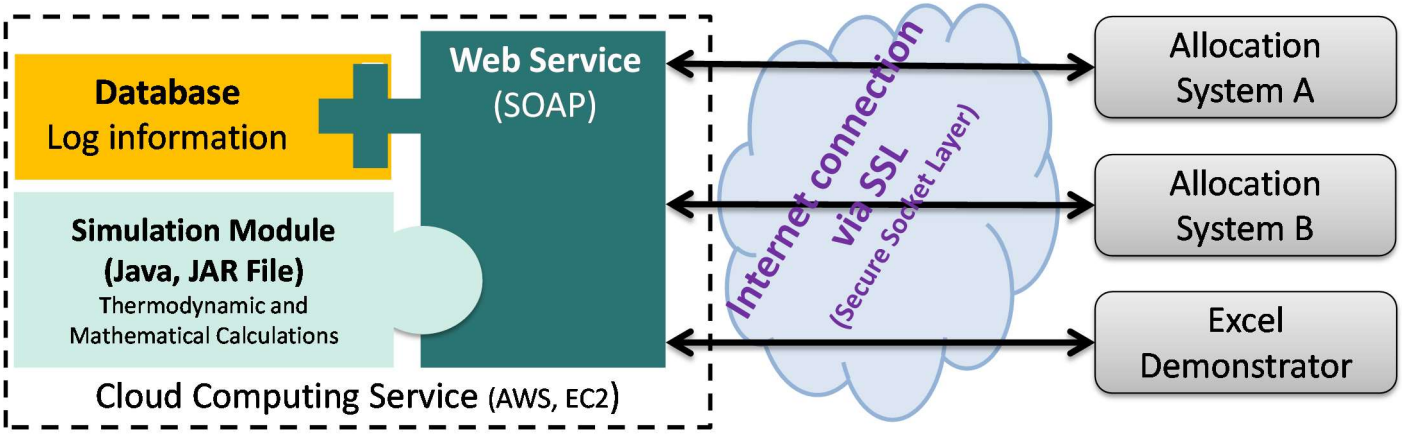

The demonstrator has been tested with Excel 2010 and 2013 but may also operate with other versions.

The Excel demonstrator is designed to illustrate one way to configure, access and use the CHARM software via a web service.

Other deployment options are available for those who either require a local web service installation or direct allocation system integration.

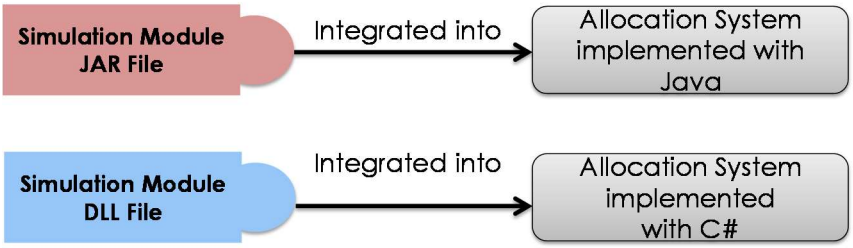

The Legal Bit

Access to the CHARM online web service is provided on an "as is" basis for demonstration and evaluation purposes only. Users are free to modify the Excel spreadsheet in any way for evaluation purposes as long as all copyright notices are reproduced.

Use with live or production systems is not permitted. The demonstration CHARM service may be altered by Accord ESL at any time. No specific level of availability is guaranteed.

Running CHARM – Quick-start (2/2)

The Example Model

This is a simple model with no recycles for demonstration purposes. Here we have three cloned component groups, A, B & C and a truncated component set:

C1, C2, C3, C4+, N2 & CO2.

More complex models with many objects, additional components and recycles are supported.

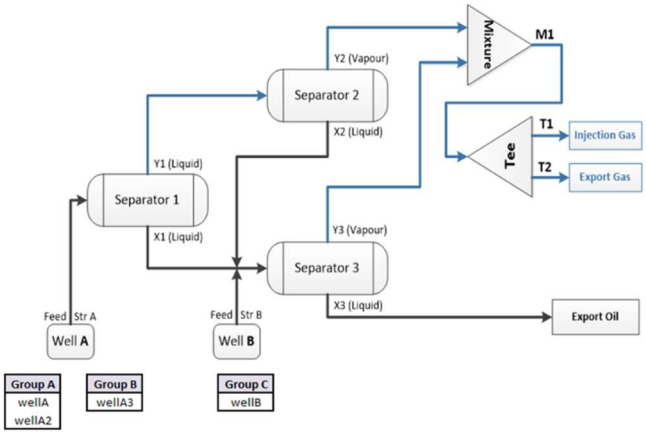

Execution & Display of Results

Open the Excel file and navigate to the **<Controller>** worksheet. The CHARM username and password are "demo" and "demopwd".

Choose which worksheet is to be displayed after successful execution from the drop down box on the Controller Worksheet: Detailed Results Report or a Results Summary. Pressing the "Run CHARM" button will call the web service then navigate to the relevant worksheet.

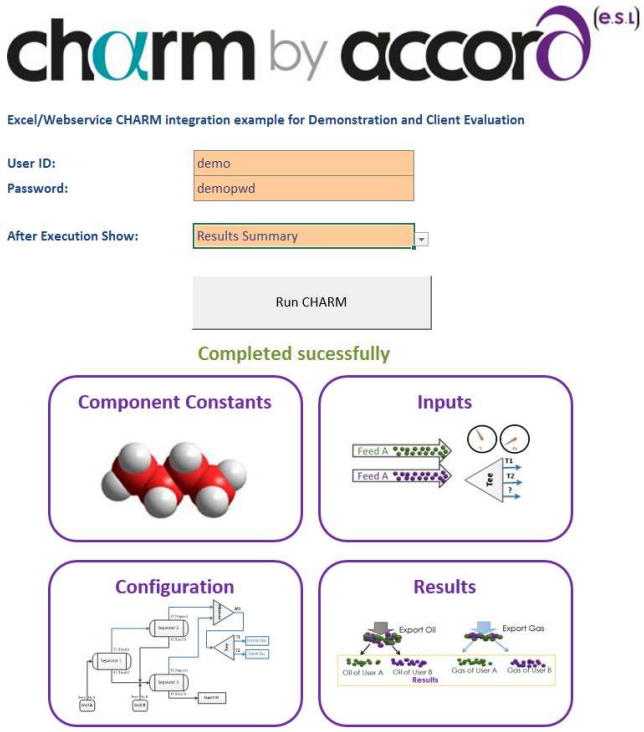

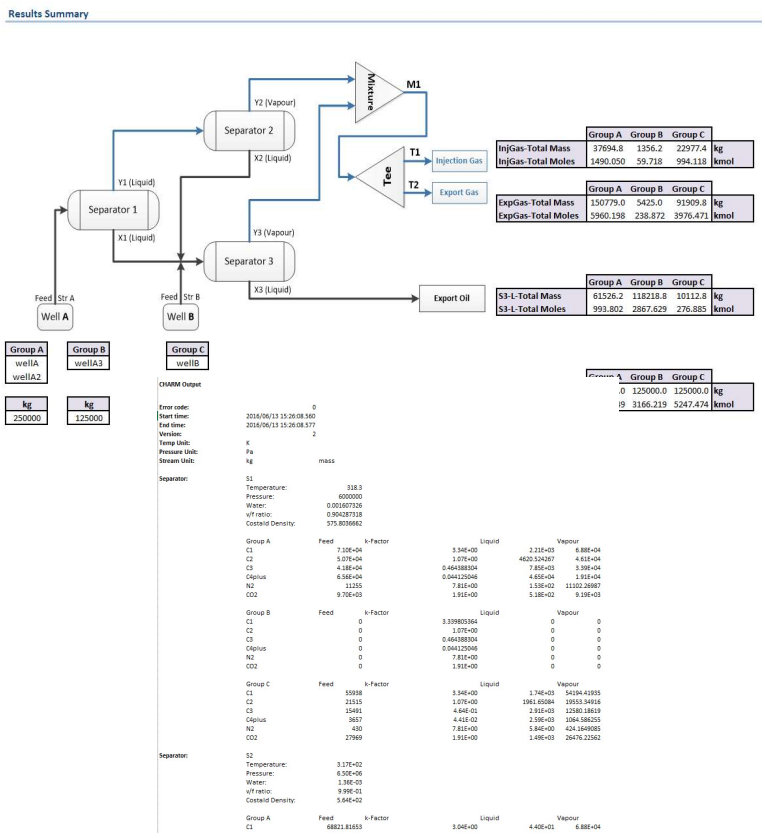

General Principles

CHARM requires three sets of information to operate:

- The component data set which lists the components along with their key properties and their Peng–Robinson equation of state binary interaction parameters;

- The simulation process objects and stream connections making up the simulation network;

- The component feed rates for each input stream, the process conditions for the separators and scrubbers and the specification of the stream split for the tees.

The first two sets of information are those required to define the new process network and are setup on the **<Components>** and **<Configuration>** worksheets. The feed rates, process conditions and stream splits which are on the **<Inputs>** worksheet which is discussed later.

For most simulations the process network configuration will tend not to change for each run. However, more complex scenarios can be modeled where the configuration sent to CHARM by the allocation system can be changed per allocation run to:

- Alter hypothetical component (e.g. c20+) molecular weights in the feed streams for each run for those allocation systems which calculate these dynamically for each feed;

- Model different facility operating modes where the routing of streams may change; For example, when a separator is taken offline for part of a day and the wells rerouted.

NOTE: As can be seen in the figures that follow, cells outlined in purple contain Excel named ranges used by the demonstrator. New data can be put in them but care must be taken not to delete the cells when editing the spreadsheet.

Currently Supported Simulation Process Objects

Simulation networks are comprised of a number of different simulation objects, which are connected together by streams. The CHARM flash calculation service currently supports the following objects:

Object	Details
Separator	Consists of one or more input streams and results in a liquid and vapour output streams. Requires the pressure in Pa and the Temperature in degrees K
Scrubber	Consists of one or more input streams and results in a liquid and vapour output streams. This configured in exactly the same way as the Separator object.
Mixer	Consists of a number of input streams and results in a single output stream.
Tee (splitter)	Consists of one or more input streams and splits the total between any number of output streams. Tee Splits can be defined in kmol, kg or ratio.

Components

Component constants

Component	Flash Acentric Factor	Critical Pressure (Pa)	Critical Temperature (K)	Mol. Weight	COSTALD Accentric Factor (SRK)	Characteristic Volume
C1	0.0115	4640680	190.7	16.04	0.0074	0.0994
C2	0.0986	4883850	305.4	30.07	0.0983	0.1458
C3	0.1524	4256660	369.9	44.1	0.1532	0.2001
C4plus	0.3007	3031620	507.9	86.18	0.3007	0.3682
N2	0.04	3394370	126.2	28.01	0.0358	0.0901
CO2	0.2389	7370000	304.1	44.01	0.2373	0.0938

Any list of components may be defined. We have setup a small number in the Excel demonstration.

All components can be cloned for allocation purposes in two ways:

- Automatically by setting the allocation method to **ClonedComponent** and defining the clone groups (feeds / fields) on the **<Input>** worksheet.

- By manually creating new components in the above list. This method is slightly more involved but useful if you have some hypothetical components whose properties will vary per field or even per well (e.g. a C11+ hypothetical, strictly speaking this is not a clone but a hypothetical component representing a another group of C11+ molecules with different representative combined properties).

Mixes of the two approaches above are supported. For example, you may use the automatic cloning to cover C1-C10 and create new components, one per feed / field / well for the C11+ values.

The cell outlined in purple is defined as the Excel range **component_constants.** It is important when editing the Excel worksheet that this cell is positioned as shown. When sending data to CHARM Excel will work down the list of components from this cell until it finds a blank line.

Binary interaction parameters

	CO2	N2	C4plus	C3	C2	C1
C1	0.1000000015	0.0359990001	0.0234741177	0.0068288026	0.0022413488	
C2	0.1298000067	0.0500000007	0.0114137772	0.0012579061		
C3	0.1350000054	0.0799980015	0.0051419535			
C4plus	0.1250000000	0.1490000039				
N2	-0.0199970007					

Each pair of components requires the input of the relevant binary interaction parameter. Binary interaction parameters are used in the equations of state to further compensate for the non-ideality of a given binary mixture. They do not tend to vary per allocation run and are supplied with process simulators' component packages and are fixed for a particular component set. They can therefore be easily looked up as a one-off operation during the model design and setup. Accord can also supply relevant binary interaction parameters on request.

The cell outlined in purple is defined as the Excel range **binary_interaction.** It is important when editing the Excel worksheet that this cell is positioned as shown. When sending data to CHARM Excel will work down and across the list of components from this cell until it finds a blank line.

Allocation Network Configuration

Object configuration

Leave a blank row between each object

Name: DEMO-EXCEL

Object				Inputs		Outputs		
ID	Order	Water	Type	ID	In?	ID	Type	Out?
S1	10	N	Separator	wellA	Y	S1-V	V	N
				wellA2	Y	S1-L	L	N
				wellA3	Y			
S2	20	N	Separator	S1-V	N	S2-V	V	N
						S2-L	L	N
S3	30	N	Separator	S1-L	N	S3-V	V	N
				S2-L	N	S3-L	L	Y
				wellB	Y			
M1	40		Mixer	S2-V	N	M1-V	V	N
				S3-V	N			
T1	50		Tee	M1-V	N	InjGas	V	Y
						ExpGas	V	Y

Column	What to Enter
ID	A unique id for the separator, scrubber, mixer or tee. Conventionally the relevant equipment Tag from P&ID diagrams is used for separators & scrubber.
Order	The initial solve order working from feed to output. The order must be a unique integer.
Water	Y or N. Used for separator and scrubber simulation objects only. If Y then sufficient water will be included in the flash calculation to saturate the vapour stream for the simulation object.
Type	Separator, Scrubber, Mixes or Tee.
Inputs – ID	A unique stream name for each input feed to the object.
Inputs – In?	Y or N. If Y then the feed must be supplied as an input stream on the **<Input>** worksheet. If N then the stream must be an output from another object.
Outputs-ID	A unique stream name for each output from the object.
Outputs-Type	V or L. Vapour or Liquid. One of each is required for separators and scrubbers.
Outputs-Out?	Y or N. If Y then the output will appear in the Exported Gas or Exported Oil data at the end of the detailed results report. If N it will only appear in the results report if the **<Input>** worksheet output setting for Full Info is set to Y.

To extend the table simply insert new lines. In order to duplicate the cell drop down validations it is also necessary to then copy & paste an existing line other than the first line over the newly inserted lines.

The cell, *S1*, in purple in the first line is defined as the Excel range **config**. It is important when editing the Excel worksheet that this cell is positioned as shown. When sending data to CHARM Excel will work down the list of objects from this cell until it finds a two fully blank lines.

Allocation Period Inputs (1/2)

General Settings

Setting	What to Enter
ID	Currently set to the Name in the object configuration. In future this may change.
Calculation Settings	You should only change these if the model is not converging.
Allocation Method	NoAllocation or ClonedComponent. If ClonedComponent is selected you must setup the clone groups on the right. Each feed stream marked as an In = Y on the **<Configuration>** worksheet must appear against a clone group.
Units	Select either mass (kg) or moles (kmol) as input stream and results units.
Output Settings	If Y all intermediate calculations are reported in the output. Otherwise N just lists those streams that have Out? = Y in the **<Configuration>** worksheet.

ID: DEMO-EXCEL

Calculation settings

Flash calc convergence	K-Factor convergence	Max iterations
0.0001	0.0001	1000

Recycle calculation

Recycle convergence	Max iterations
0.0001	1000

Allocation method

Method	Groups		
	Group A	Group B	Group C
ClonedComponent	wellA	wellB	wellA3
	wellA2		

Units

Unit name
mass

Output settings

Full Info?
Y

Process Conditions & Measurements

Object Data

Object ID	Seperators / Scrubbers Temperature (K)	Pressure (Pa)	Tees Stream	Split	Tee Unit
S1	318.3	6000000			
S2	316.6	6500000			
S3	304	7000000			
T1			InjGas	0.2	ratio

Data must be present for every Separator, Scrubber and Tee in the **<Configuration>** worksheet. The cell, *S1*, in purple in the first line is defined as the Excel range **object_data**. When sending data to CHARM Excel will work down the list of objects from this cell until it finds a blank line.

Setting	What to Enter
Separator, Scrubber	The temperature in K and the pressure in Pa
Tee	All but one of the Tee outputs should be specified. The Tee unit specifications may be ratio, mass (kg) or moles (kmol).

Allocation Period Inputs (2/2)

Feeds

Input Streams (kg or kmol depending on unit)

	wellA	wellB	wellA2	wellA3
C1	32895	16548	38141	55938
C2	24671	21640	26006	21515
C3	16447	31823	25312	15491
C4plus	37830	50915	27739	3657
N2	9868	764	1387	430
CO2	3289	3310	6415	27969

Each feed stream marked as an In = Y on the **<Configuration>** worksheet must appear along with each component in the **<Components>** worksheet.

The cell outlined in purple is defined as the Excel range **input_streams_data.** It is important when editing the Excel worksheet that this cell is positioned as shown. When sending data to CHARM Excel will work down and across the list of components and streams from this cell until it finds a blank line.

The values entered should match the units chosen in the general input settings.

Options

Results are written to the **<Report>** worksheet. The level of detail depends on whether Full Info was set to Y on the **<Input>** worksheet Output Settings section.

CHARM Output

Error code:	0	
Start time:	2016/06/13 15:26:08.560	
End time:	2016/06/13 15:26:08.577	
Version:	2	
Temp Unit:	K	
Pressure Unit:	Pa	
Stream Unit:	kg	mass
Separator:	S1	
	Temperature:	318.3
	Pressure:	6000000
	Water:	0.001607326
	v/f ratio:	0.904287318
	Costald Density:	575.8036662
	Group A	
	C1	
	C2	
	C3	
	C4plus	
	N2	
	CO2	
	Group B	
	C1	
	C2	
	C3	
	C4plus	
	N2	
	CO2	
	Group C	
	C1	
	C2	
	C3	
	C4plus	
	N2	
	CO2	
Separator:	S2	
	Temperature:	
	Pressure:	
	Water:	
	v/f ratio:	
	Costald Density:	
	Group A	
	C1	
	C2	
	C3	

CHARM Output

Error code:	0	
Start time:	2016/06/13 16:00:34.809	
End time:	2016/06/13 16:00:34.829	
Version:	2	
Temp Unit:	K	
Pressure Unit:	Pa	
Stream Unit:	kg	mass

****
**** THE FOLLOWING RESULTS ARE AVAILABLE IN EXCEL RANGE: Report_Results
**** THEY CAN BE ACCESSED USING VLOOKUP ETC
****

Exported gas

InjGas	Outlet: InjGas	Group A	Group B	Group C
InjGas-Total Mass	Total Mass	37694.75382	1.36E+03	2.30E+04
InjGas-Total Moles	Total Moles	1.49E+03	5.97E+01	9.94E+02
InjGas-C1	C1	1.38E+04	6.38E+02	10900.49088
InjGas-C2	C2	9.26E+03	322.1716093	3.93E+03
InjGas-C3	C3	6.81E+03	223.1760859	2.53E+03
InjGas-C4plus	C4plus	3700.45837	3.96E+01	2.06E+02
InjGas-N2	N2	2.23E+03	5.30E+01	8.52E+01
InjGas-CO2	CO2	1848.032448	8.05E+01	5.33E+03

ExpGas	Outlet: ExpGas	Group A	Group B	Group C
ExpGas-Total Mass	Total Mass	150779.0153	5.42E+03	91909.77968
ExpGas-Total Moles	Total Moles	5960.198186	238.8721959	3976.471015
ExpGas-C1	C1	55370.39364	2551.230075	43601.9635
ExpGas-C2	C2	37054.78307	1.29E+03	15731.66639
ExpGas-C3	C3	27237.34542	8.93E+02	10104.01872
ExpGas-C4plus	C4plus	14801.83348	1.58E+02	825.5472104
ExpGas-N2	N2	8922.52987	2.12E+02	340.887414
ExpGas-CO2	CO2	7392.129793	3.22E+02	2.13E+04

Exported oil

S3-L	Stream:	S3-L	(Costald density = 517.612529032727)	
		Group A	Group B	Group C
S3-L-Total Mass	Total Mass	61526.23091	1.18E+05	1.01E+04
S3-L-Total Moles	Total Moles	993.8015378	2.87E+03	2.77E+02
S3-L-C1	C1	1.82E+03	1.34E+04	1.44E+03
S3-L-C2	C2	4.36E+03	2.00E+04	1.85E+03
S3-L-C3	C3	7.71E+03	3.07E+04	2.86E+03
S3-L-C4plus	C4plus	4.71E+04	5.07E+04	2.63E+03
S3-L-N2	N2	1.02E+02	4.99E+02	3.89E+00
S3-L-CO2	CO2	4.64E+02	2.91E+03	1.34E+03

Extraction & Use

The 'Exported gas' and 'Exported oil' results at the end of the **<Report>** worksheet can also be accessed via the Excel named range **Report_Results.**

The **<Results Summary>** worksheet illustrates the named range being used to lookup the data and display it against the schematic.

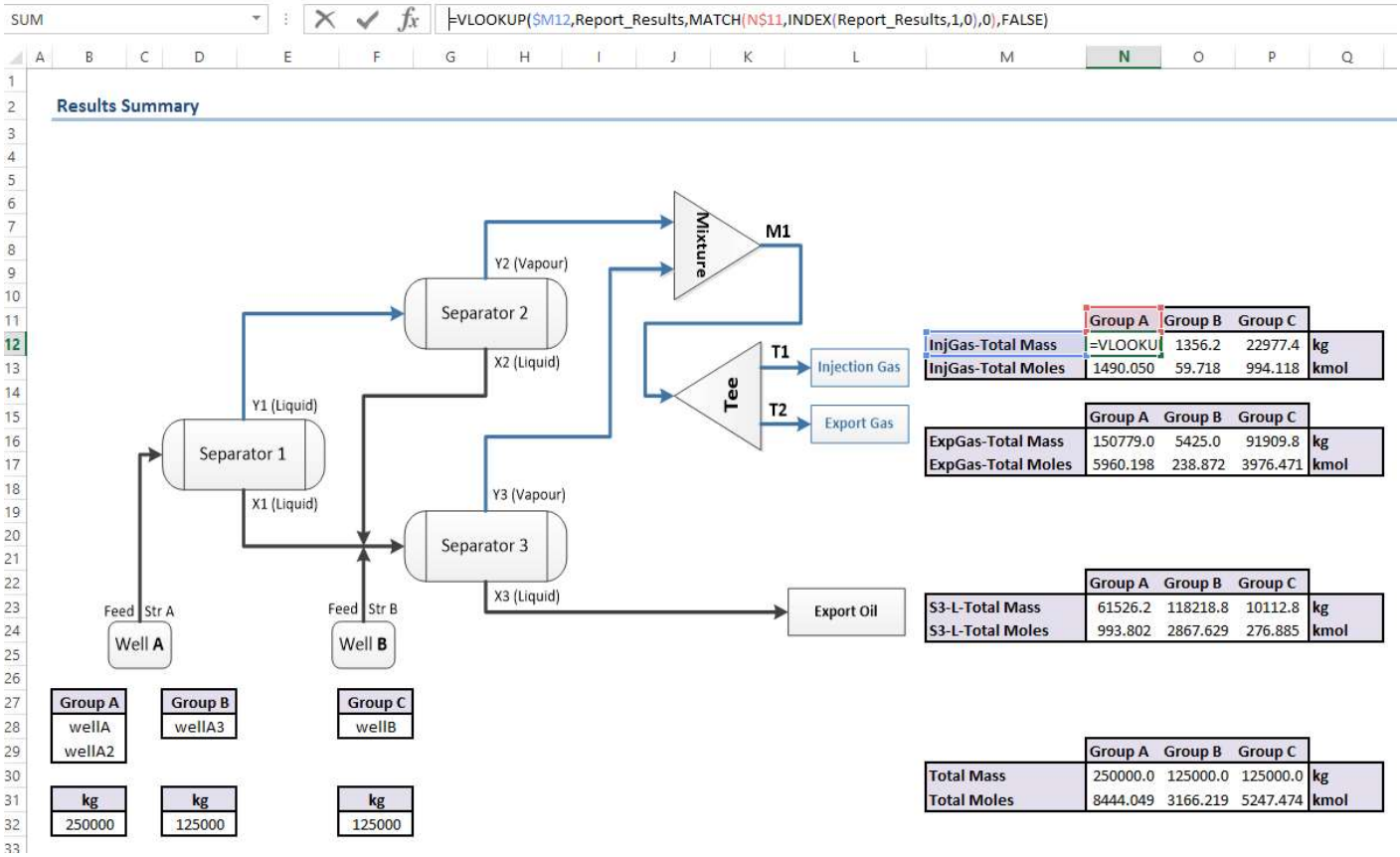

Additional Information (1/3)

Frequently Asked Questions

Who do I contact to find out more?

Please email us at charm@accord-esl.com or call us on +44 (0) 1224 914015.

How do I know I can trust the results?

Extensive validation has taken place comparing the results of the CHARM calculations to those from HYSYS for a variety of compositions and separation process networks.

How is it licensed and what does the license cover?

CHARM is available on a subscription basis based on an initial fee and ongoing annual subscription on a per regime or assert group basis. Please contact Accord ESL to discuss your specific situation.

The subscription covers Initial help & technical advice in invoking CHARM and interpreting the results plus ongoing office hours support and access to future upgrades. It does not cover allocation engineering consultancy, for example investigations to help you decide on the best approach for the use of CHARM in your situation or work to integrate CHARM to your allocation system or regime.

What are my installation options?

CHARM can be provided via a Web Service hosted by Accord ESL. Currently we use Amazon Web Services to provide the secure and scalable hosting. Local installation on a client's network is also possible on a suitable server. CHARM can also be supplied as a Java jar file or Microsoft DLL for direct integration into allocation software.

What are your plans for the product?

Our preference is for ongoing enhancements to be led by customer demand. Nevertheless we have a road map of likely items such as adjustors which will open up additional opportunities to replace the traditional process simulators used in allocation systems.

Please contact us to discuss any particular needs.

In some cases workaround are possible. For example if you have meters on both the vapour and liquid streams from a first stage separator and need to simulate adjusting the input rates to match then a workaround using tees is possible.

Execution Options

The **<Parameters>** worksheet contains the lists and other data used by the workbook. Three of the values may be changed by the user:

Parameters_ExcelDebug_Timing	FALSE
Parameters_SwitchOffAppRecalc	TRUE
Parameters_SwitchOffXMLLog	FALSE
Parameters_SaveDataInWebservice	FALSE

Parameter	What to Enter
Parameters_ExcelDebug_Timing	TRUE outputs detailed timing data on the **<Controller>** worksheet.
Parameters_SwitchOffAppRecalc	Set to TRUE if linked to other spreadsheets. This prevents them recalculating each time a status/timing message is output. Recalculation is enabled at the end of the CHARM run.
Parameters_SwitchOffXMLLog	The XML sent to and received from CHARM can be saved to the **<log>** worksheet. For large simulations with many objects and components this can become unwieldy since Excel cells have a finite size and Excel itself has memory limitations. Generally this should be set to TRUE unless setting up a new model and checking the XML.
Parameters_SaveDataInWebservice	If true the CHARM web service will save the input and result XML in its database. Generally, allocation systems will set this to false when calling CHARM since it will be the responsibility of the calling allocation system to store the data securely. The only way CHARM will save allocation data is if the calling allocation system explicitly requests it to do so when it makes the calculation request. Clients may, for example, choose to do this by exception during initial setup.

Additional Information (3/3)

Error Messages

CHARM employs two levels of validation. Initially the submitted XML is automatically checked against the associated XSD definition. This will produce automatically generated text to highlight the technical error. If the XML passes the XSD check it is then validated for consistency against CHARM rules. This second check will give more user-friendly error messages.

Please contact charm@accord-esl.com or call +44 (0) 1224 914015 if you require any help with the Excel Demonstrator.

Message Example	Meaning
ERROR: 817 - Input XML: SAX Exception: cvc-complex-type.2.4.d: Invalid content was found starting with element 'stream'. No child element is expected at this point.	The XSD validation has failed. In this case the **<Input>** worksheet Object Data had a separator with additional Tee properties input. Error messages like this come from the XSD and point to gross errors in the data sent to CHARM.
ERROR: 804 - The object [S1] has a missing property or properties! Check your input.	The object S1 in the **<Input>** worksheet Object Data is missing a property (e.g. it could be a separator missing a pressure).
ERROR: 1206 - Missing/Over component(s) of input stream [wellA]! The following component(s) is missing: [CO2].	CO2 has been defined in the configuration but is missing from the **<Input>** worksheet Input Streams.
ERROR: 1205 - Input stream(s) in config XML and input XML not match! Check following stream(s) [wellA3] in your config XML and input XML.	wellA3 has been defined in the configuration but is missing from the **<Input>** worksheet Input Streams.
ERROR: 411 - Invalid binary interaction coefficient(s). Number of tags in the tag "binatyIterList" is not correct! If you have n-components then you have to list n-1 tags with binary interaction coefficients.	The list of binary interaction parameters defined is inconsistent with the list of components on the **<components>** worksheet.
ERROR: 1200 - Duplicate vessel's id [S1]! Check your config XML.	Object S1 is defined more than once in on the **<Configuration>** worksheet.